Diameter
60cm (23.7")

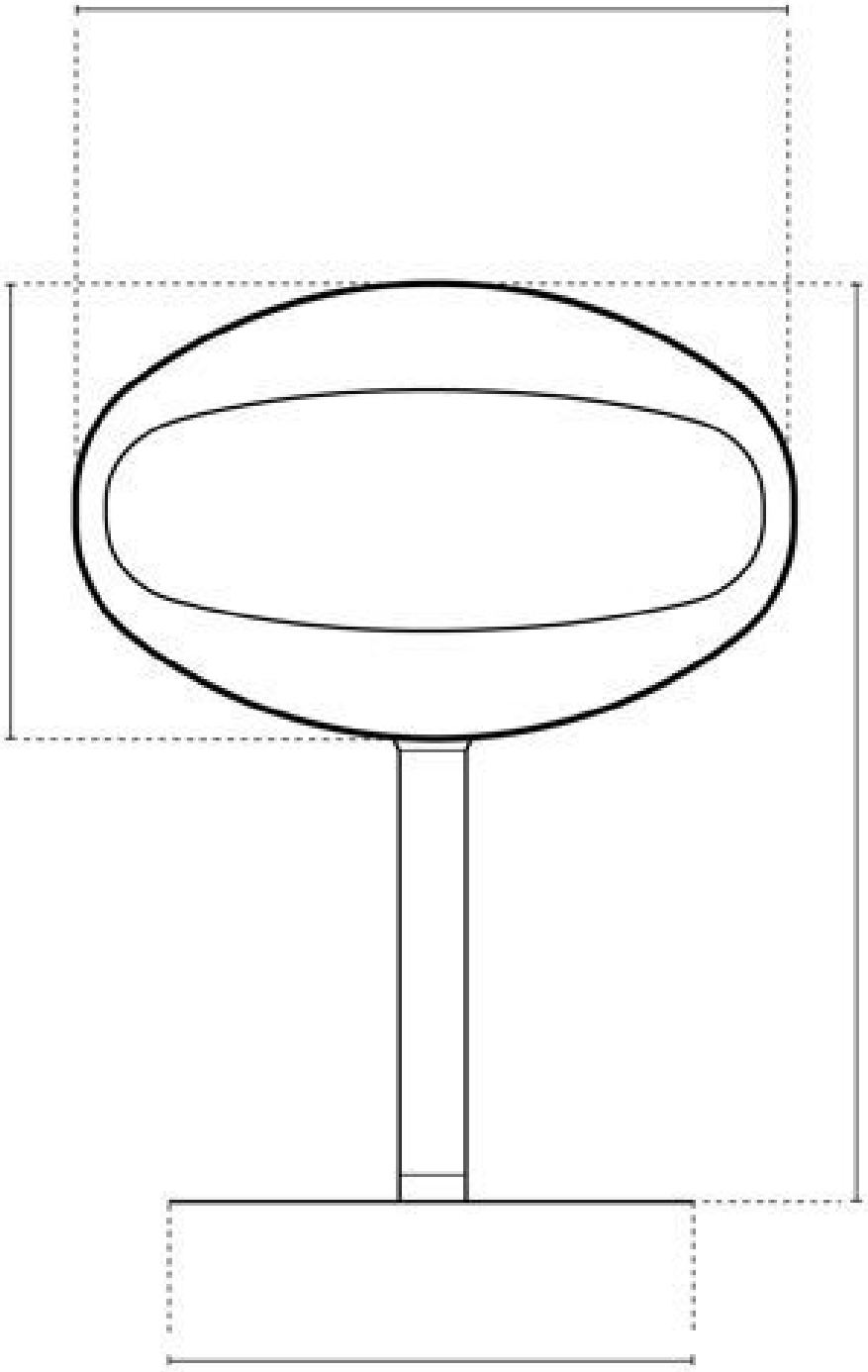

Height
38cm (14.9")

Height
74cm (29 1/8")

Diameter
40cm (15.7")