Unit Dimensions

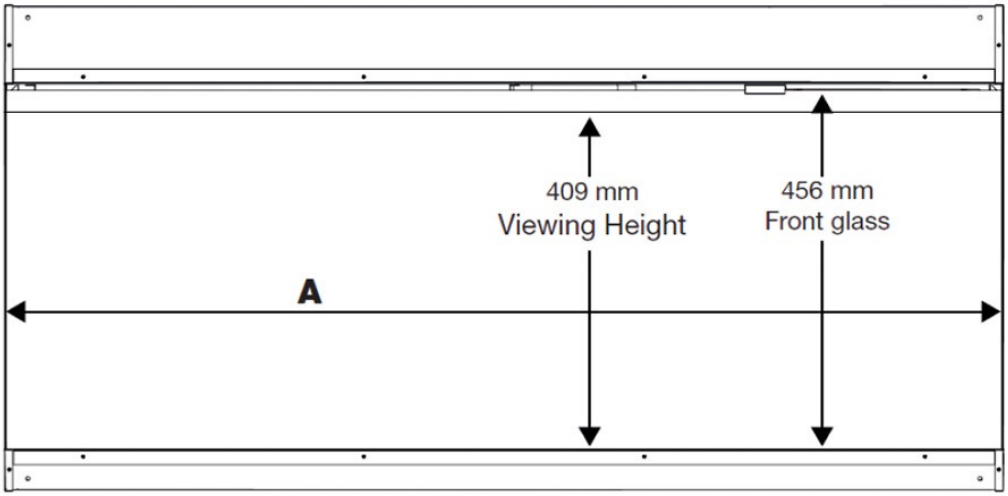

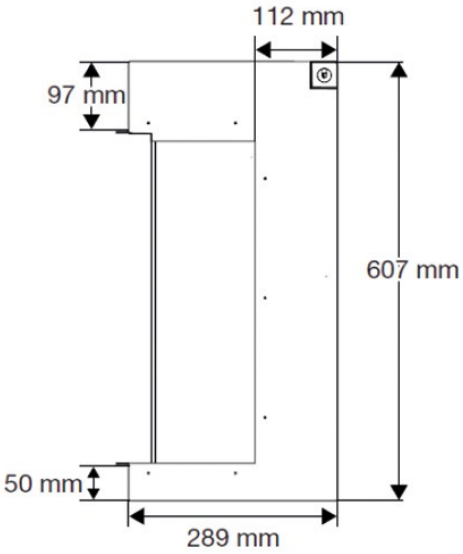

MODEL	A
Ignite Bold 50	124,6cm
Ignite Bold 60	156,5cm
Ignite Bold 74	188,3cm